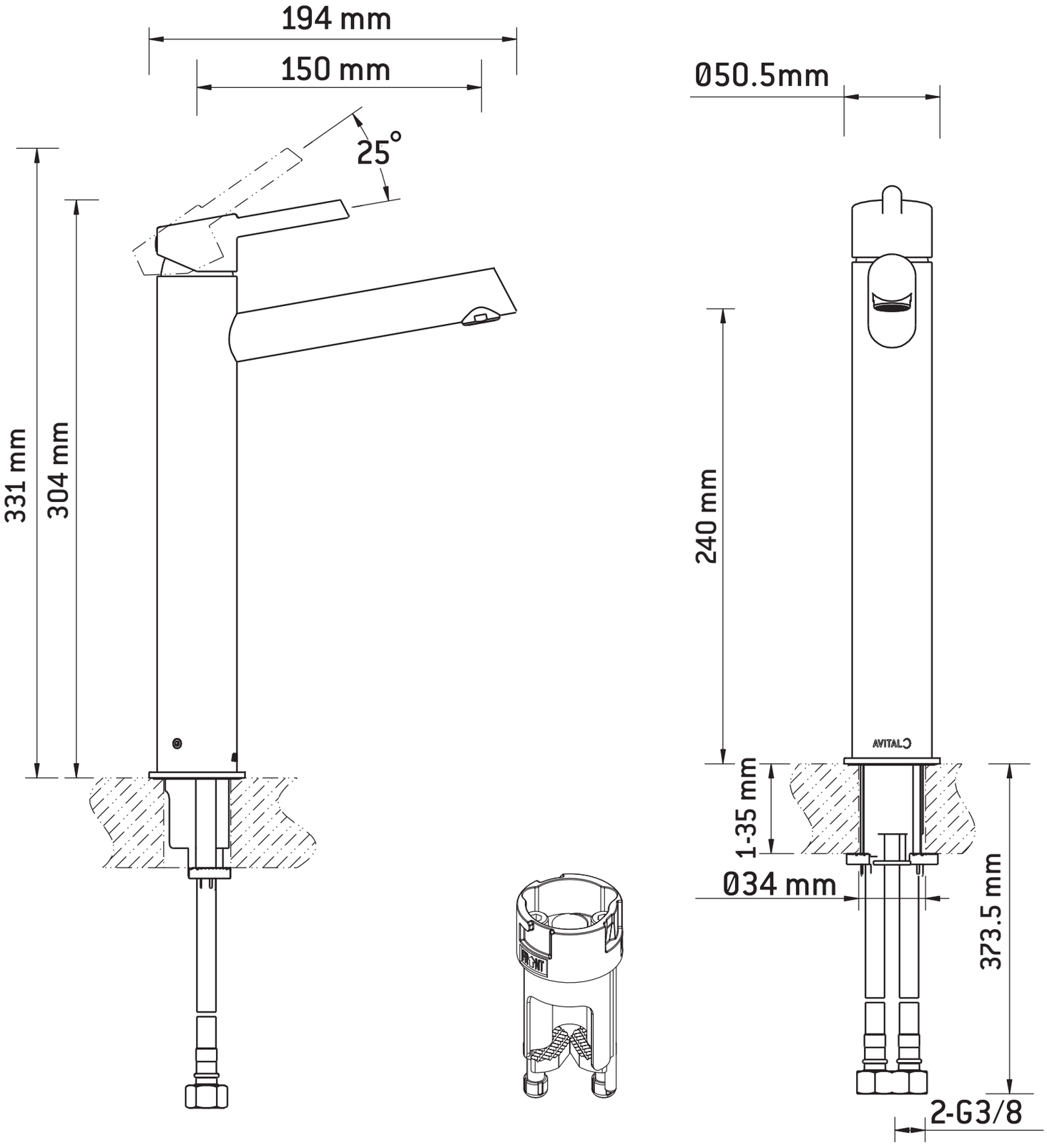
194 mm
150 mm
25°
331 mm
304 mm
Ø50.5mm
240 mm
AVITAL
1-35 mm
Ø34 mm
373.5 mm
2-G3/8